SOLiD™

Q4 2016

PRESENTED BY:

GraybaR

In-Building Wireless and Public-Safety IMPERATIVE

THE DEFINITIVE GUIDE FOR PRIVATE AND PUBLIC BUILDING OWNERS AND PROPERTY MANAGERS

EVOLVING PUBLIC-SAFETY COMMUNICATIONS NEEDS

IN-BUILDING PUBLIC-SAFETY SYSTEMS: PAST, PRESENT & FUTURE

UNDERSTANDING PUBLIC-SAFETY CODES

PUBLIC-SAFETY AND PUBLIC CELLULAR IN-BUILDING WIRELESS SYSTEMS

AND MORE....

KEEPING PEOPLE CONNECTED AND SAFE

SOLiD Public-Safety DAS (Distributed Antenna System) solutions comply with today's fire codes requiring separate in-building network infrastructure.

SOLiD supports first responder and essential two-way radio frequencies while meeting rigorous survivability standards and working in interference-free harmony with commercial cellular networks.

SOLiD™

solid.com

SOLiD **EXPRESS**™ Public Safety DAS

www.solid.com/das-solutions/express-public-safety-das.html

UL NEMA NFPA IFC APCO International SAFER BUILDINGS COALITION

In-Building Wireless and Public-Safety IMPERATIVE™

CONTENTS

Foreward ..... Page 2

Introduction to the Public-Safety Imperative ..... Page 4

Evolution of the Public-Safety Imperative ..... Page 6

The Role of Public Safety and Public Cellular ..... Page 10

Understanding Fire and Building Codes ..... Page 14

Funding and Ownership ..... Page 18

Case Study: DC Water ..... Page 21

Glossary of Terms ..... Page 23

ACKNOWLEDGEMENTS

SOLiD thanks and acknowledges the following subject matter experts who enthusiastically contributed to this publication:

Jonathan Adelstein
President and CEO of PCIA - The Wireless Infrastructure Association

Mike Brownson
Vice President, DAS Technical Solutions, Hutton Communications

Chief Charles 'Chuck' Dowd
Assistant Chief-911 Communications, New York Police Department (ret) and former FirstNet board member

John Facella, P.E., C.Eng.
Principal at Panther Pines Consulting

Greg Glenn
Sr. Director, RF Engineering, SOLiD

Donny Jackson
Editor, Urgent Communications

Clark Lazare
National Information Systems, AT&T Government Solutions

Robert LeGrande II
Principal, The Digital Decision; former Chief Technology Officer, Government of the District of Columbia

Claudio Lucente
Independent Consultant at Fiorel (Canada)

Manuel Ojeda
President, Morcom International

Chief Alan Perdue
Fire Chief, Greensboro, North Carolina (ret)
and Executive Director, Safer Buildings Coalition

Rusty Stone, RCDD
Telecommunications/Tech Project Manager at Camden Property Trust

FOREWARD

BY DONNY JACKSON

To a large extent, most people — and enterprises — organize their plans into three main areas: (1) things they must do; (2) things they ought to do; and (3) things they would like to do or would be nice to have, but are not necessities and arguably are luxuries.

As an example, consider the notion of a parent planning a child's education. It is generally accepted that parents "must" take steps to have their children educated at least through the high school level — to a large extent, it is the law. Most agree that they "ought" to have their kids attend a school that helps ensure students' safety and provides an environment that prepares students to continue their education at a college or university, if they want. It would be "nice" if the school(s) provides strong programs in areas of special interest to the student — be it arts, athletics, student politics, etc. — and happens to be a nearby public school, as opposed to a private school that requires a lengthy daily commute.

During the past three decades, communications have undergone a rapid transformation that has seen wireless communications evolve from a luxury to a necessity for most in society.

As a young reporter for a newspaper in a Dallas suburb, I remember a city council member in the late 1980s and early 1990s argue that students should be prohibited from carrying cellular phones on public-school campuses. His reasoning was that cellular phone service was so expensive that the only students with both the need to have a mobile phone and the money to pay for one were kids working for drug dealers. In addition, students that really needed to make a call could always find a landline phone in the school office or a nearby pay phone.

This position may sound crazy, but it was not simply dismissed at the time. When the council member first announced his position, mobile phone use was limited largely to the wealthy few who could afford a service that offered spotty coverage at best. However, as prices dropped and coverage improved, cellular phones became more mainstream, and parents wanted their kids to have them, so they could communicate things like dinner plans and when they needed to be picked up from after-school activities.

Today, the wireless evolution/revolution has had a massive impact on the way we communicate. There are more wireless devices in the market than people on the planet, with many users having more than one device.

In short, wireless technology — be it Wi-Fi, Bluetooth, cellular or land mobile radio (LMR), which is used by public safety and many other enterprises — is the method that is used most for both voice and data communications. In a growing number of circumstances, wireless is the only option, because wireline service is no longer ubiquitous indoors. About 40% of U.S. households do not have a wireline phone, according to the FCC. Meanwhile, pay phones are about as rare as 8-track tapes and VCRs.

As a result, wireless connectivity indoors is no longer "nice" to have or something that "ought" to be done; today, it is a "must," if only to ensure that people can call for help in case of an emergency — a notion that the FCC recognized when it adopted new 911 rules designed to bolster indoor location accuracy information from wireless devices. It is — as the title of this eBook suggests — an "imperative." But wireless indoor coverage always has been a challenge. Radio signals lose strength as they encounter physical obstacles, whether it is in the form of a mountain, a dense forest or a man-made structure, like a high-rise office building or an apartment complex.

Making the challenge more difficult are advances in the energy efficiency of buildings. The designs and materials used to keep buildings warm in the winter and cool in the summer while using less power also are significantly more resistant to radio signals. In these energy-efficient buildings, the idea that radio signals from an outdoor tower consistently will be able to penetrate inside a building to provide indoor coverage — particularly coverage that does not drain battery life from a device — no longer is realistic.

Instead, a more reliable approach is to design coverage inside a structure. When designed effectively, an in-building coverage solution will deliver a better radio signal to a wireless device, which typically results in better audio quality for voice applications, better throughput speeds for data applications and longer battery life for the user's device. It also has potential to deliver much better location

data from the device, including much-anticipated vertical — or "Z axis" — information.

From a public-safety perspective, good indoor coverage for customers and first responders provides multiple benefits during an emergency response.

Initially, strong commercial indoor coverage lets consumers who are indoors dial 911 to report an emergency via their cellular phone — the device they are most comfortable using, and it should provide better location information in the near future. This can save valuable time in circumstances when seconds can mean the difference between life and death.

Once first responders are on the scene, a good indoor public-safety system allows firefighters, law enforcement and EMS to communicate better and more efficiently using LMR voice today, with the potential to leverage Band 14 LTE and transmit sensor data via myriad technologies in the near future. This data capability includes the ability to track the location of first responders, as well as monitor their health via biometric technology.

When first-response efforts have gone awry, communications difficulties almost always are cited as a key contributing factor. This is understandable, because any organizing an endeavor – from the construction of a sports arena to planning a family reunion – tends to happen more smoothly when strong lines of communications are open.

In short, a facility with good indoor wireless-communications coverage for consumers and public safety is inherently safer than those that lack this functionality. Without good indoor coverage, there likely will be a delay in reporting an emergency situation and the response effort often is delayed, which can lead to increased property loss, injuries and fatalities.

This straightforward reality should be reflected in the laws and financial issues associated with buildings and other structures. Laws and insurance discounts have long been in place to require or encourage the installation of fire sprinklers — with good reason, because such systems can reduce property loss and save lives.

Given that indoor wireless coverage achieves similar goals in broader range of use cases — fire sprinklers will not help a victim of a heart attack or domestic violence — we should have similar requirements and incentives in place for in-building wireless systems for both consumers and public safety.

Building owners who make the commitment to provide this capability should be rewarded legally and financially for making their facilities safer. Those who do not provide in-building wireless coverage in their facilities should pay higher insurance rates and other costs, because their structures simply are not as safe as those with in-building coverage.

Not only are policies associated with in-building coverage important from a safety perspective, they have other implications, as well. With reliable indoor coverage and location capabilities, applications and businesses can be established that leverage this information. In addition, good in-building coverage helps keep customers happy, which is always good for business.

Meanwhile, if a network provider knows that in-building coverage is available in all facilities, they do not have to spend as much on outdoor macro towers, in hopes of having the radio signals from the towers penetrate the buildings to provide indoor coverage. In 2014, officials for Public Safety Communications Research (PSCR) stated that FirstNet could reduce the number of outdoor sites needed for its much-anticipated public-safety broadband network by 14%, if it knew that indoor coverage was available in all buildings.

Exactly how this should be implemented is a matter that should be a topic of healthy debate that should be part of a conversation that needs to happen sooner, rather than later. Investments in wireless technologies continue to accelerate, and they can be done much more efficiently if everyone understands the big-picture goals as soon as possible.

For instance, given the 911, lifeline and public-safety implications of in-building systems in the foreseeable future, my belief is that the core in-building wireless capability should be hardened from a power and physical standpoint for both consumers and public safety. However, various scenarios and costs factors need to be assessed before policies are set — different types of buildings may justify different approaches.

This is just one example of the nuanced technical and policy discussions that should occur in the coming months and years. But the important thing is that these conversations take place, so appropriate policies can be established that enable efficient deployment of technologies that will make both consumers and first responders safer in the future.

Addressing this in-building wireless issue is the right thing to do, and the timing is ideal. It should be considered an imperative.

Donny Jackson, Editor,
Urgent Communications

INTRODUCTION: THE PUBLIC-SAFETY COMMUNICATIONS IMPERATIVE

JOHN CELENTANO, EDITOR

"If you can't call us, we can't help you."

Chief Alan Perdue, Fire Chief, Greensboro, North Carolina (ret)
and Executive Director, Safer Buildings Coalition

Public-safety communications is at an important juncture.

Every day, seemingly, news headlines are filled with reports of incidents in which communications plays a pivotal role in the outcome.

At the height of any emergency, it is paramount that first responders can communicate with one another "Do they hear me? Can I hear them?" Yet as clear as this imperative is, the stark reality is that public-safety communications faces challenges, particularly inside buildings having certain characteristics.

But public-safety communications is not relegated to police, fire and emergency medical services (EMS). It's about the general public, too. After all, if you or I can't be notified about an incident or call for help, first responders won't know to help us.

It is imperative that every stakeholder in the public safety milieu assess and address the issues that impact their contribution to public-safety communications:

- First responders must find common ground on communications systems, and in each jurisdiction, determine how police, fire and EMS should interoperate.
- Communications equipment vendors must deliver products and services that provide robust in-building wireless solutions, while serving wireless digital handheld devices and cellular smartphones that are changing both verbal and non-verbal communications in public-safety and public cellular networks alike.
- Municipalities and local jurisdictions must stipulate the building and fire codes that make buildings safer within their jurisdictions, while staying current with continual national and international code revisions.

> **"At the end of the day, a cop or firefighter needs to be able to key up: I need help!"**
>
> Chief Charles "Chuck" Dowd, Assistant Chief-911 Communications, New York Police Department (ret) and former FirstNet board member

- Commercial building owners and property managers must adopt and implement prevailing local building and fire codes, and find workable business models to fund in-building wireless systems that enhance public safety inside their buildings.

To be sure, it is vital that both public safety and commercial cellular to work together to solve for public safety communications. This outcome is the vision of FirstNet, the ambitious and once-in-a-generation initiative to create a new public-safety broadband network (PSBN). However, FirstNet was intended to fund and achieve outdoor communications, not indoor. With an estimated 80 percent of all wireless calls originating or terminating inside buildings, it is vital that indoors does not get left behind.

It is with these issues in mind that The Imperative has been created.

This eBook is intended as a reference document for the many constituents who face the challenges of improving in-building wireless service that supports public-safety communications.

In preparing this document, we consulted many of the industry's leading experts and proponents in public-safety communications, tapping their deep knowledge and experience in public-safety codes, first responder operations, wireless technology, and telecommunications networks.

The outcome is a series of discussions on the most pertinent topics:

PUBLIC-SAFETY COMMUNICATIONS EVOLUTION
A look at how public-safety communications got started and where it's headed.

UNDERSTANDING CODE FOR PUBLIC-SAFETY COMMUNICATIONS
An overview and demystifying of relevant and evolving building and fire codes related to public-safety communications.

THE ROLE OF PUBLIC SAFETY AND PUBLIC CELLULAR IN-BUILDING WIRELESS SYSTEMS
A hotly-debated topic in which we weigh the pros and cons of each network architecture approach.

PAYING FOR IN-BUILDING WIRELESS SYSTEMS: FUNDING AND OWNERSHIP
A discussion of strategies for overcoming the challenge of an unfunded mandate for indoor public-safety communications.

CASE STUDY: DC WATER
A profile of a unique public-safety communications deployment in the nation's capital wastewater treatment plant.

We believe that fostering discussion and debate will only help to get the key issues on the table. Such discussion can lead to a consensus and progress on how public safety communications issues are addressed and solved.
To that end, we welcome your comments and feedback.

EVOLUTION OF THE PUBLIC-SAFETY COMMUNICATIONS IMPERATIVE

Public-safety communications has evolved out of necessity and in line with technological advancements. Throughout this evolution, there have been many imperatives. Over time, it is through these imperatives that we have advanced our communications and created safer environments to work, live and play. So with FirstNet on the horizon and wireless broadband technologies aligning with our current imperative, how did we get to where we are today? How did technology play a role, and how did the stakeholders make it happen?

WORD OF MOUTH

Throughout history, the shrill cry of "FIRE! FIRE!" was the call to action that summoned first responders to the scene of an emergency. Simple, and it worked. That is until towns turned into cities and new technology presented a viable and more efficient alternative. From a simple "FIRE!" to E-911, scalability and enhanced voice technology are the key drivers and are relevant even today.

FIRE CALL BOXES

By the 1830's technology was at the ready, and like most high-tech advancements, you have solutions looking for problems to solve. Even by today's standards, the telegraph found its way into public safety very quickly and rapidly advanced the ability to communicate with the fire department. Using telegraphy, the first fire call box was installed in Boston in 1852. Call boxes were simple machines that generated a telegraph signal that was decoded at a central location. The idea of using some sort of signaling to notify the fire department of an emergency situation vastly improved response times. Call box designs improved and the bright red metal boxes sprouted up on corners throughout major cities across the country. More important, each call box was numbered and was connected to a central dispatch station that received an alarm when the call box was activated or "pulled" by a citizen or police. Now fire departments could receive immediate notification of a fire, determine the approximate location of the fire from the call box number, and dispatch fire crews to the scene within minutes. Adding a telephone to a call box further advanced the speed, efficiency and accuracy of notifying the fire department because the caller connected directly with a dispatcher at the central station and could provide more detail on the exact location of the fire or incident. Call boxes with telephone jacks were installed in buildings to serve the same purpose as outdoor call boxes. As technology advanced, so did the efficiency of public safety communications and a shift in stakeholder's responsibility. Up to this point, municipalities primarily funded, installed and maintained the call box networks.

Even though curbside call boxes are a thing of the past, building and fire codes still require manual pull stations in every commercial building. Building owners became stakeholders in public safety and will continue to play a significant role in the communication imperative. Buildings old and new now have code requirements for fire prevention, detection, alarms and communication systems.

But what about communications among the police, fire and EMS at the scene of an emergency? Enter in more technology – the portable radio.

LAND MOBILE RADIO (LMR)

Handheld two-way technology found its way home with the troops returning from World War II. Motorola engineers developed the technology and supplied the

troops during the war. After the war, the company looked for ways to commercialize its 'walkie-talkie' designs. Motorola promoted its two-way mobile radio to police and fire departments for public-safety uses. Now police officers and firefighters could communicate with each other with portable radios.

These radios at first were analog devices that operated over only a few channels so their functionality was limited and often the system became congested trying to handle an overload of calls, especially during an emergencyinside buildings.

In response, the government and the industry organization APCO established initiatives to develop required capabilities and standards beginning with Project 16 which was later supplanted by Project 25 (or P25) to improve public-safety communications for enhanced coordination, timely response, and efficient and effective use of communications equipment.

Operating at VHF/UHF and 800 MHz frequencies, P25 radios can be used inside buildings because the low frequencies can penetrate walls. However, there are limitations: dense building materials, and high tech finishes, like high efficiency window coatings, can reduce or even block RF signals. Additionally the type of building will also play a role in RF signal reception. In tall buildings, first responders cannot communicate with each other above 10 floors if they are operating in 1:1 simplex mode. Conventional- or trunked-mode that uses base stations and repeaters can help communications inside buildings, but every building is different.

"When you move into the 'built environment' where we do our work, you never know what you're going to get" says Chief Alan Perdue, a retired Fire Chief of Guilford County Emergency Services

"FIRE! FIRE!"

From a simple "FIRE!" to E-911, scalability and enhanced voice technology are the key drivers and are relevant even today.

in Greensboro, North Carolina and currently the Executive Director of the Safer Building Coalition. Without an adequate in-building wireless facility, two-way radios quickly can hit their limits.

Recent events in our history have made it painfully clear that it is better to communicate wirelessly, and this is where the imperative becomes very clear. Every building or structure presents a unique communication challenge and it's this challenge that begins to define the Imperatives stakeholders and their roles to meeting the challenges. Once again technology will be leveraged to meet the challenge.

WIRELESS BROADBAND

Most teenagers with smartphones today possess wireless communication abilities that are superior to today's first responders. Wireless broadband technology, like the telegraph over a century ago, is set to advance public-safety communications and it promises to deliver big! FirstNet is a wireless broadband network based on 4G LTE technology operating in the 700 MHz band and is slated to support the next generation of public-safety communications

Using nationwide 700 MHz spectrum, FirstNet is designed to unify the decades-long disparate public-safety communications, and will help keep communities and emergency responders safer with a robust ubiquitous network.

FirstNet's appeal is that it will leverage commercial wireless technology that is complementary to what the major cellular carriers are using.

Designed with a redundant highly-available, high-reliable architecture, FirstNet will support mobile devices that operate in both public-safety and cellular carrier frequencies with the back-up that first responders want according to Robert LeGrande, a former CTO for the District of Columbia and current CEO of the Digital Decision, a consultancy for communications initiatives for Federal, State and Local governments. This way, if the public-safety frequencies go down for any reason, first responders can 'roam' or transfer their calls onto the public cellular network.

LeGrande believes that FirstNet's capabilities for handling voice, data and video communications over a unified network platform make it very compelling for first responders. This broadband link opens possibilities for streaming video from body cameras to access to data including photographs, building drawings and maps not to mention true interoperability between first responders.

With appropriate filtering, there will be no interference with public cellular 4G LTE 700 MHz frequencies, whether on the outdoor network or on an in-building DAS. Proper system design is the key, nonetheless. In addition to the FirstNet frequencies, a DAS can carry P25 VHF/UHF and 800 MHz public safety frequencies which will remain operational for some time, thereby enhancing in-building coverage for two-way radios.

Progress requires change and LeGrande expects police and fire departments will be slow to give up the familiarity of their LMR radios in favor of a new multi-purpose handheld device on FirstNet. He believes, however,

FirstNet

CONGRESS CREATES FIRSTNET

On February 22, 2012, the U.S Congress enacted the Middle Class Tax Relief and Job Recovery Act of 2012 (Spectrum Act) which:

- Formed the First Responder Network Authority (FirstNet) as an independent authority within the U.S. Department of Commerce. FirstNet is charged with responsibilities for deploying and operating the nationwide public safety broadband network.
- Gives FirstNet the mission to build, operate and maintain the first high-speed, nationwide wireless broadband network dedicated to public safety.
- FirstNet will provide a single interoperable platform for emergency and daily public-safety communications. This broadband network will fulfill a fundamental need of the public safety community as well as the last remaining recommendation of the 9/11 Commission.
- Directed the Commission to allocate the D-Block (758-763 MHz/788-793 MHz) to public safety for use in a nationwide broadband network;
- Designated that FirstNet will hold the license for both the existing public safety broadband spectrum Band 14 (763-769 MHz/793-799 MHz) and the reallocated D Block, and
- Allocated up to $7 billion dollars to FirstNet to construct this nationwide public-safety broadband network.

HISTORY LESSON: THE FIRE MARK

These metal plaques marked with the emblem of the insurance company were affixed to the front of insured buildings as a guide to the insurance company's fire brigade. Subscribers paid fire fighting companies in advance for fire protection and in exchange would receive a fire mark to attach to their building. The payments for the fire marks supported the fire fighting companies. Folklore suggests that the volunteer fire company would not fight a fire unless there was a fire mark on the burning building.
(Sources: Wikipedia and The Firemark Circle of the Americas)

that once first responders become comfortable with wireless broadband capabilities and with proper training and testing, they gradually will migrate from LMR radios.

THE IN-BUILDING WIRELESS IMPERATIVE

What are building owners to make of FirstNet?

At this writing, building and fire codes are being revised and updated to include DAS technology as a viable extension of the public-safety communications network indoors. Today, there are specific code and standards that address: coverage area, fire-rated cable raceways and equipment enclosures, battery back-up and requirements for redundancy, system monitoring and acceptable communication signal levels.

For the majority of people, 80 percent of cellular traffic occurs indoors and, when most people are faced with an emergency today, they reach for their mobile device to call 911, not a landline. This in-building reality is the imperative that will further advance and drive code requirements, and appropriate solutions will need to align to meet the requirements.

Once established in the code, architects and engineers, commercial developers and building owners can start to plan for in-building wireless as part of the facility's ecosystem. Still, to make it all work, Chief Perdue is emphatic that public safety is an imperative is shared by multiple stakeholders: "The industry - manufacturers, designers, installers, building owners and public-safety organizations – they all have to be at the table."

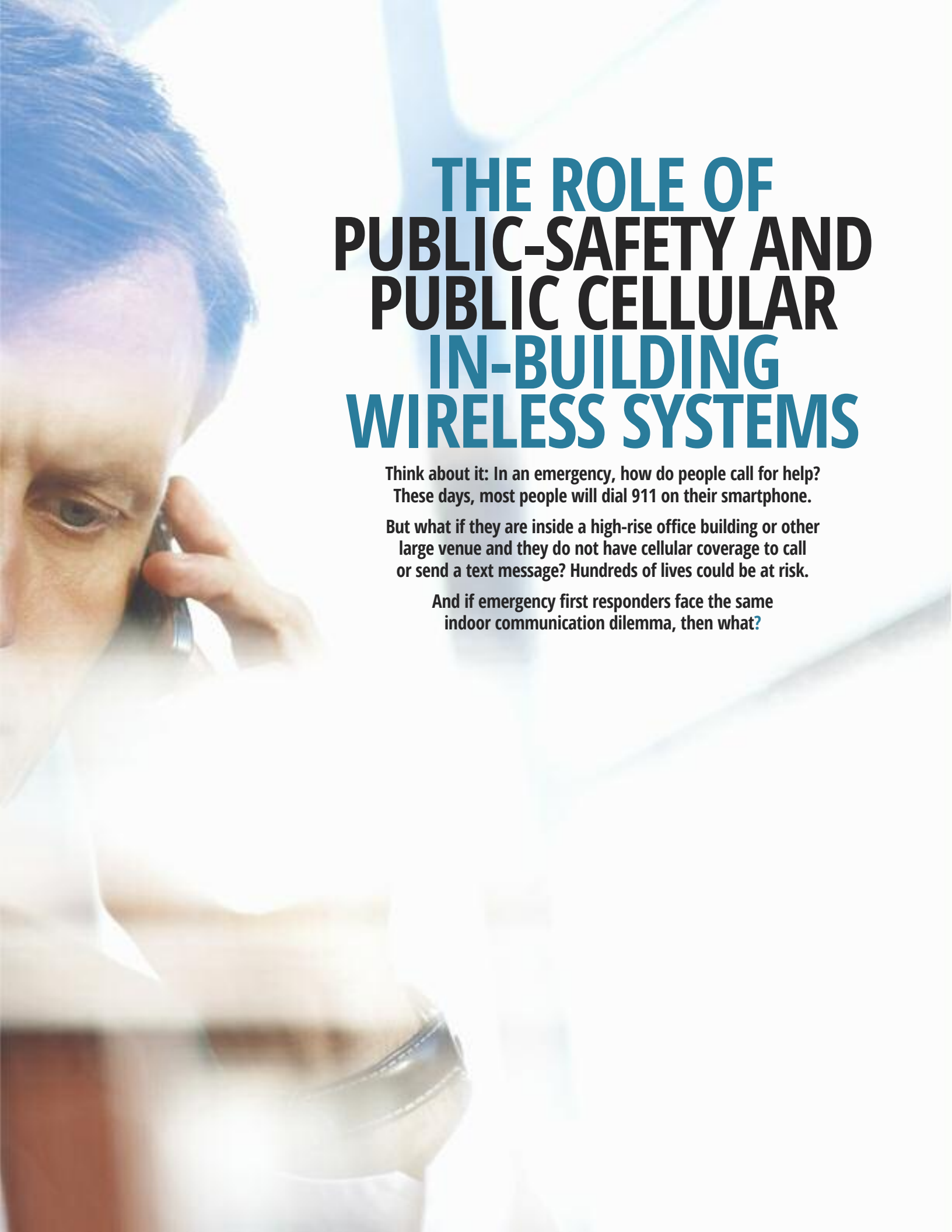

THE ROLE OF PUBLIC-SAFETY AND PUBLIC CELLULAR IN-BUILDING WIRELESS SYSTEMS

Think about it: In an emergency, how do people call for help? These days, most people will dial 911 on their smartphone.

But what if they are inside a high-rise office building or other large venue and they do not have cellular coverage to call or send a text message? Hundreds of lives could be at risk.

And if emergency first responders face the same indoor communication dilemma, then what?

According to statistics from AT&T, nearly 80 percent of all wireless calls originate or terminate inside buildings. In response, the wireless industry has developed solutions to enable cellular service from the outside, in. A proven approach is through the use of Distributed Antenna Systems (DAS).

By design, a DAS can support frequency bands from multiple cellular providers. Similarly, a DAS designed to enable public-safety communications can support the multiple frequency bands used by public safety such as VHF/UHF and 800 MHz.

This raises an important question: Should a single DAS support both cellular and public-safety signals?

At first blush, the advantages appear to be attractive. However, there are myriad considerations that inform a definitive answer may not be clear.

"There is a big need for in-building coverage for public safety" says Greg Glenn, Sr. Director, RF Engineering at SOLiD. "The problem is that there are not any best practices to deal with public-safety communications. Each city and county has their own take [on in-building wireless], so it is hard for DAS installers to know what to do in each case." (For more information, please see our chapter on "Understanding Fire and Building Codes for Public-Safety Communications")

Glenn points out that the frequency assignments for public-safety and cellular services have gotten closer so the potential for interference has increased. This situation has arisen with 800 MHz re-banding for cellular that could interfere with 800 MHz Trunked radio used by first responders. A similar situation arises in 700 MHz frequencies where adjoining bands are assigned for carrier-based commercial cellular 4G LTE and FirstNet public-safety channels.

"Outside, we're good with 1,000-2,000 feet between base stations. Indoor application is much different than outdoor; we're not so lucky," says Glenn.

Traditionally, most DAS equipment manufacturers focus on developing solutions that are optimized for cellular applications. After all, nearly nine of every ten dollars spent on in-building wireless gear is for commercial cellular. DAS equipment that is designed outside of the U.S. is often unable to handle both cellular and public safety in the same building. Support for both services must be filtered, but that adds complexity and cost to the systems.

SOLiD's Glenn describes three

HOW A DISTRIBUTED ANTENNA SYSTEM (DAS) WORKS:

The cellular radio frequency (RF) signal source is fed into a DAS head-end. The signal source may be: 1) a base transceiver station (BTS) for cellular, public safety or both, that is co-located at the DAS head-end, or 2) a bi-directional amplifier (BDA) co-located with the head-end and is fed by a directional antenna, called a donor antenna that picks up the outside signal from a nearby macrocell site.

The DAS head-end converts the RF to an optical signal for transmission over fiber optic cable that connects to DAS remote units.

The DAS remote unit then converts the optical signal back to RF and connects to one or more indoor antennas that are strategically located or distributed throughout the building.

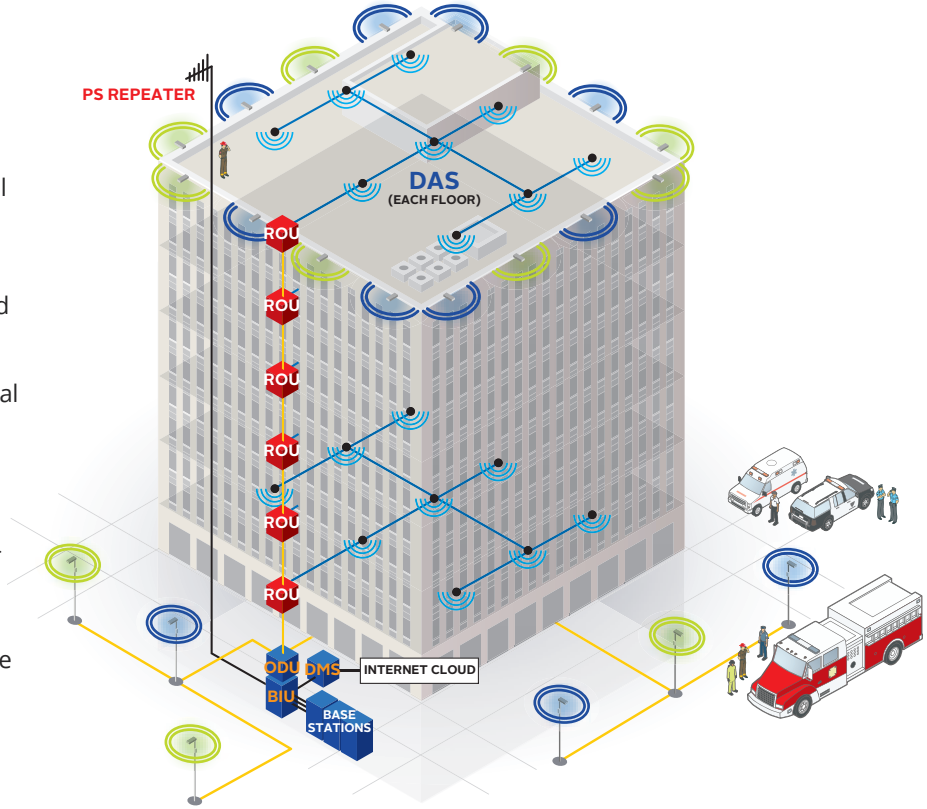

approaches for enabling both commercial cellular and public safety indoors:

1) Separate or parallel DAS layers that have discrete infrastructure including cable feeds and antennas for cellular and public safety.

2) "Hybrid" separated DAS layers that have separate cable infrastructure (i.e., public safety on one fiber from the head-end and cellular on another fiber) but then combine both services on the same antenna.

3) Converged DAS where commercial cellular and public-safety frequencies are combined on the same DAS infrastructure

The latter remains controversial. Technically, a converged platform is feasible but only with the addition of expensive RF filtering at the DAS remote to ensure that the respective services do not interfere with each other. In addition, specialized codes for public safety may not apply to commercial cellular service. And lastly, carriers or third party owner neutral hosts may not pay for a public-safety DAS.

"There are pros and cons both ways", says Mike Brownson, Vice President DAS Technical Solutions at Hutton Communications. "You have to let the application determine the way to go, taking into account the building size and shape, and the materials used. Then there are the building owner's priorities, who is putting the system together, and politics and technology, especially when you bring in public safety."

He adds that with cellular DAS you pretty much need coverage everywhere. "Public safety doesn't necessarily need full-building coverage but in large buildings you need to cover stairwells and lower levels. If you design each one for what's needed, you probably end up with a lot less equipment."

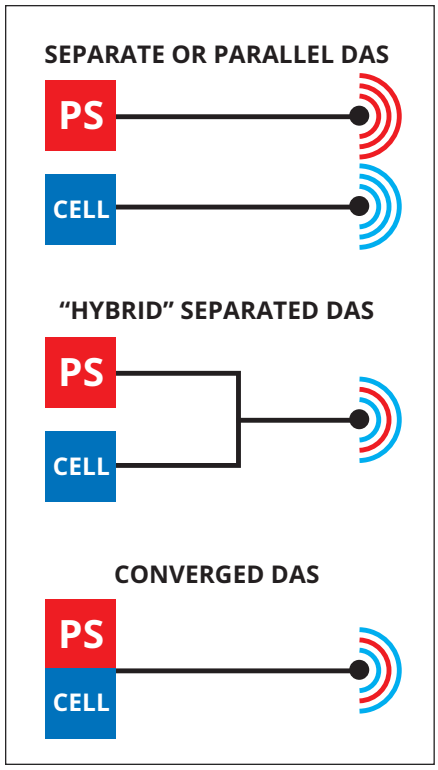

Three approaches for enabling both commercial cellular and public-safety coverage indoors.

The International Fire Code (IFC) stipulates 95% general building coverage for public safety. By contrast, the National Fire Protection Association (NFPA) stipulates 90% general building coverage but 99% coverage in critical areas such as control rooms or pump rooms.

"With Land Mobile Radio (LMR), to move from 90% to 95% coverage is not trivial", says John Facella, principal at Panther Pines Consulting. "It's a non-linear relationship. It might mean adding 50% more [antenna] sites. I'm not sure if it's worth it."

"DAS for public safety is still up to in the air. It's up to the industry to agree on what's needed. In-building wireless buildouts are problematic in general. Tier 1 is covered by the carriers. Tier 2, the middle tier, - who will pay for it, nobody knows. FirstNet won't do it", added Facella. "Implementation of sprinklers, smoke detectors, fire pull boxes took time. The middle tier won't be built out soon. It may take a long time. Economics will dictate separate or a converged system."

The real question is more operational, and the ability for various first responder agencies to communicate with each other outside and inside buildings.

Chief Charles 'Chuck' Dowd, retired Assistant Chief for 911 Communications for the New York Police Department (NYPD) and former FirstNet board member has first-hand experience where interoperability and less than optimal coverage impacted the emergency communications. He was on-site during 9/11, Hurricane Sandy and the Northeast Blackout. "These are high-volume, high-demand situations where the police, fire and EMS need to talk to each other."

Dowd says that first responders have difficulty communicating inside buildings because first responders use two-way radios differently. "When fire crews are dispatched then get on-scene, they tend to go to 1:1 simplex operation with their radios, there is no network-wide communications."

The problem is that point-to-point communications, between command on the ground and crews 30 stories up, is limited in high-rise building as the building structure itself greatly limits the RF signal.

In contrast, police use radios that are almost all on network frequencies served by a network of towers. They tend to work better in taller buildings because they receive signals from land-based towers or even better, from antennas installed at similar elevations on nearby buildings.

Solutions to improve coverage and interoperability for public-safety communications currently exist, and other initiatives are on

the way. Today's DAS networks can support first responders via LMR, VHF/UHF frequencies. Now fast forward a few years and the FirstNet requirements are likely to provide additional communications capabilities to first responders through broadband, LTE-based radios. Broadband capability will indeed open the door for public safety to take advantage of technology that the general public uses today. Live video from body cameras and GPS location based applications will leap communications to new levels.

Dowd believes that it will take time for public-safety agencies to adopt LTE handset technology and that there will be a period of transition as the FirstNet vision becomes a reality. The benefits of a public-safety broadband network are significant but the costs to migrate, and a huge embedded base of LMR VHF/UHF radios means that the technology will be around for some time. To that end, in-building DAS solutions will need to be engineered to support both LMR and LTE frequencies.

Said Dowd, "At the end of the day, a cop or firefighter needs to be able to key-up, 'I need help!' Will FirstNet mimic the reliability of LMR? It will happen eventually."

THE IN-BUILDING WIRELESS IMPERATIVE

Will it take another natural disaster or other tragedy to achieve the vision shared by many including Chief Dowd as well as the Safer Buildings Coalition for making buildings safer by developing initiatives that lead to more buildings being served with commercial and public-safety wireless communications coverage?

Robert LeGrande, a former CTO for the District of Columbia and current CEO of the Digital Decision, a consultancy for communications initiatives for Federal, State and Local governments echoes the aforementioned views that solving for indoor public-safety communications means thinking about tomorrow, today. "We're not trying to solve a problem, we're trying to create a comprehensive and long term solution. We need to branch out and look at non-traditional thinking on both sides – commercial and public safety – to accomplish that."

Are building owners and equipment suppliers up for the challenge?

While technical issues are fairly well understood at this juncture, the IFC and NFPA fire codes need to evolve. So building developers and DAS designers are reluctant to commit unless the requirements are clear.

Local jurisdictions need to take a stand on what standards and regulations should apply, but they too are being cautious, pending new code releases.

Facella comments, "We're hoping IFC will take a similar stance as NFPA, hopefully with similar numbers. Today's minimum standards have wide conflicts."

Lastly, there's the challenge of complying with an unfunded mandate. Is it solely up to the building owner to fund a public-safety DAS in their building? Or is it a shared responsibility among in-building stakeholders including the venue, wireless operators and municipality? What about tax incentives or insurance discounts that inspire to comply with what is required

Although there are more questions than answers at this point, it is clear that it is vital not to leave buildings behind.

CAN YOU HEAR ME?

Police and Fire personnel depend on code-compliant coverage on multiple frequency bands for two-way radio and emergency communication no matter where they are in your facility – through thick building walls and even underground.

UNDERSTANDING FIRE & BUILDING CODES FOR PUBLIC-SAFETY COMMUNICATIONS

CODES AND WHY ARE THEY IMPORTANT?

Navigating myriad international, national and local building and fire codes for public-safety communications can be bewildering and confusing to most property owners and building managers. Even experts in the field find it challenging to stay current with the necessary changes.

Public-safety codes establish the guidelines for building and fire safety to protect occupants and first responders alike in the event of a fire or other life safety emergency in both new and existing buildings.

Common terminology includes 'codes', 'standards' and 'ordinances'. These terms are not the same even though they are often used interchangeably. Yet they work together to accomplish the common goal of reliable indoor communications.

Basically, 'codes' are what you have to do, 'standards' tell you how to accomplish that, and 'ordinances' provide the legal path for getting those functions into place. (Figure 1)

A key distinction in public safety for stakeholders that hail from the commercial wireless industry is the rigidity of code language: public-safety codes stipulate "shall"

requirements, not "should" guidelines.

Fire alarms and sprinkler systems have been around since the mid to late 1800s, and the codes for those systems were some of the first fire and building codes adopted in this country. By comparison, model code language for in-building wireless public-safety communications are relatively new, less than 10 years.

The International Code Council (ICC) introduced in-building requirements for public-safety communications into the International Fire Code (IFC) in 2009. And even then, it only showed up in the appendix, which meant it was a recommendation available for adoption, not necessarily a requirement in the technical provisions of the code. Upon further modification, that language got moved to the technical provision of chapter five of the IFC in 2012. National Fire Protection Association (NFPA) requirements also followed similar timelines.

The intent of ICC's IFC is "to establish the minimum requirements consistent with nationally-recognized good practice for providing a reasonable level of life safety and property protection from the hazards of fire, explosion or dangerous conditions in new and existing buildings, structures and premises, and to provide safety to fire fighters and emergency responders during emergency operations."

The NFPA stipulates that a 'code' or 'standard' includes "a wide variety of technical works that prescribe rules, guidelines, best practices, specifications, test methods, design or installation procedures and the like. The size, scope and subject matter of codes and standards varies widely, ranging from lengthy model building or electrical codes to narrowly scoped test methods or product specifications."

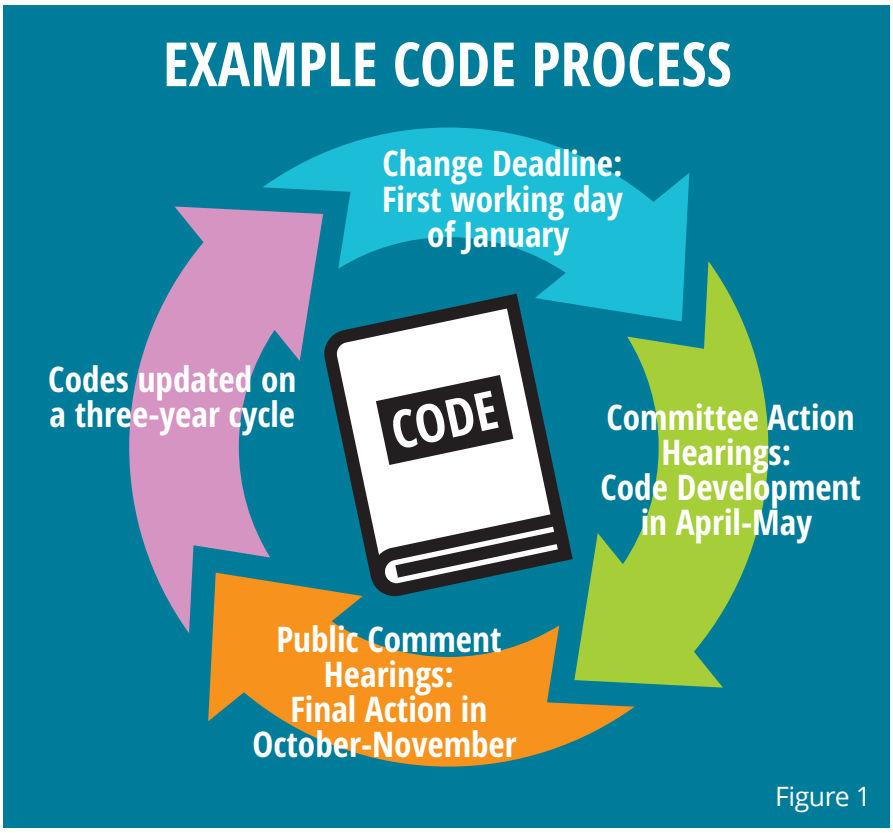

Figure 1

CODE DEVELOPMENT PROCESSES

It is important as an industry to identify what is really needed for in-building wireless public-safety communications and determine how to get modifications and/or additional requirements into the model documents for jurisdictions to adopt via state or local ordinance. This goal is to deliver more consistency for everyone involved.

ICC and the NFPA publish model codes and standards for public-safety in-building wireless communications. Model codes bring all the issues together, but there are differences between what is published by the ICC and the NFPA. So it is important to be aware of what is adopted via ordinance in each respective jurisdiction. Public agencies may combine requirements from these codes and standards to create their own code, so it is imperative that stakeholders understand what is required in each jurisdiction.

These model codes from the ICC and NFPA are typically updated on a three-year cycle, and the frequency of change for local codes can vary depending on the political climate of the community, although they rarely go longer than six years before modifications are adopted.

Model code language is adopted by the state or local jurisdictions and municipalities through ordinances that then set the rules and regulations for public-safety in-building radio enhancement systems.

CODE ENFORCEMENT

The person or entity most often responsible for enforcing these codes is referred to as the authority having jurisdiction (AHJ). Some

MAKE DUST OR EAT DUST

Chief Alan Perdue

"Our best chance to accomplish our collective goals will come from all of us working together. If every stakeholder is not involved and invested in the process, the results will continue to be all over the place. The resulting impact will be an unnecessary increased cost to in-building projects in the form of re-do installations, systems that do not work as designed and AHJs denying a certificate of occupancy which has a significant impact on t he venue owners says Chief Perdue. "If you are traveling down a dirt road, you can either make the dust or eat the dust. It's about being out front, engaged and charting your own course."

cities may empower their fire code official to enforce these codes while other communities might delegate the responsibility to the building code official.

Code enforcement is done through permitting of new construction and maintenance inspections in existing occupancies.

With new construction, the architectural drawings must be reviewed for code compliance. If the design does not meet code, then no building permit is issued.

Once an approved building is completed, a safety inspection of the building takes place. This inspection includes all of the life safety systems and will include the in-building communications enhancement networks. If all is good, then the building is granted a certificate of occupancy. If not, then it is back to work to fix the problems.

Should an existing building fall into a grandfathered situation, it may not be required to meet the latest code. Grandfathering makes political sense for the municipality as well as financial sense for the venue owner according to Donny Jackson, Editor at Urgent Communications. On the other hand, he observes that "most structures were built long before in-building codes were implemented, which means they will continue to be quite problematic for first responders if grandfathering is allowed to continue." [1.]

Increasingly, such situations usually are temporary as codes evolve to address indoor public-safety communication gaps whereby once tenant improvements are required, permitting and code compliance is enforced.

Many jurisdictions will enforce code compliance through yearly inspections that can uncover code violations from failing equipment or poorly maintained networks.

PUBLIC SAFETY COMMUNICATIONS CODE

Building owners must adhere to the applicable municipal fire and life safety codes, most of which are well-established. But it is a different story when it comes to public-safety communications.

Claudio Lucente, an independent consultant with Fiorel (Canada) points out, that there are evolving codes for public safety communications. Without clear guidelines, he explained, many firefighters operating inside buildings use two-way radios often in simplex mode where the radios communicate with each other on a one-to-one, or simplex, basis. This means that calls must be handed off to the nearest radio instead of connecting to each other over a network. If a firefighter gets into trouble, they can still get help as the call is passed from radio to radio, but it is not an ideal arrangement.

Lucente points out options for improving in-building communications for two-way radios. High-powered radio repeaters mounted on emergency vehicles can boost signals high into buildings so first responders can use their radios in broadcast mode instead of simplex mode. Repeaters afford some improvement but still not an ideal arrangement.

The need for establishing effective public-safety communications codes is growing. Chief Alan Perdue, a retired Chief of Guilford County Emergency Services in

Greensboro, North Carolina and currently the Executive Director of the Safer Building Coalition., advocates for in-building communications coverage within the code. "If public-safety personnel can obtain signals while operating outside the building, you must have them inside in order to complete their mission." He highlights that fact that police, fire and emergency medical service (EMS) teams on scene often are communicating on different frequencies including VHF/UHF and 800 MHz trunked radio. This means that these different groups "are at times unable to talk to each other." Chief Perdue also recognizes that not one communication systems size fits all because it depends on the building and other demographics of the jurisdiction. Ultimately, first responders "need a common public-safety platform, regardless of frequency."

He points out that the problem is that the codes are not uniform, they are always in a state of continuous improvement, and they take time to develop, adopt and implement. For instance, ICC calls for in-building signal coverage of 95 percent while NFPA stipulates 90 percent coverage except in critical areas such as a control room or pump room, then the requirement is 99 percent coverage. Battery backup is another issue. "What does it need to be, 12 hours or 24 hours? Twice the battery capacity means twice the space required."

That sentiment is echoed by John Facella, principal at Panther Pines Consulting with deep experience and expertise in public safety. "Providing in-building coverage is not trivial," he says. "There are several technologies from which to chose – DAS, BDAs, passive systems."

He points out however that in-building wireless was mentioned in four different NFPA codes and standards (NFPA 1, 72, 1221, and 5000) and often with conflicting language. NFPA is moving to correct the situation: the 2016 edition of NFPA 1221 will contain the detailed in-building requirements, and the 2016 edition of NFPA 72 will contain a reference to go to 1221 for the in-building requirements details. The NFPA previous language referenced BDAs and was not digital (P25) friendly. The changes include adding DAS to the in-building technologies mentioned, and accommodate both analog and digital P25 technologies.

Setting a standard for acceptable in-building wireless performance is a challenge. Facella explains that, in the original language, testing involved measuring the RF signal in dBm but RF alone does not equate to transmission quality. "Can my dispatch hear them? Can the rest of my team hear them? Do they sound excited?" So system performance testing specifications now takes into account delivered audio quality (DAQ) that does not rely on an RF engineer to conduct the test, and it actually measures what counts, what the user actually hears.

IBW IMPERATIVE

Codes for in-building wireless for public-safety communications are evolving. We all need to get on board.

This starts with demystifying codes, standards and ordinances, and helping stakeholders understand what is required to comply. Because codes are not uniform and, instead, the IFC and NFPA language is adopted at the state or local level, no repeatable nationwide much less statewide processes exist for industry to design and deploy indoor public-safety solutions. Each set of codes is "custom" and therefore each in-building project is custom.

The late Jack Daniel, according to Urgent Communications' Jackson "advocated the adoption of local codes mandating systems in buildings that would support public-safety communications when first responders were within the confines of the structure." Daniel was a leading authority who published a clearinghouse reference database for the current local ordinances and codes for in-building public-safety coverage for virtually every municipality. This information significantly provided clarity to the stakeholders but, alas, the work has not been advanced since his passing.

Similarly, venues need to prepare for public safety. At a minimum, the new building designs should include accommodation for public-safety communications infrastructure: cable runways above ceilings and in cable risers or elevator shafts, potential antenna placements in work spaces or common areas, and space allocations for equipment and power.

Exactly what type of IBW system will be installed depends on the building, the applicable local codes and the specific performance requirements.

1. Donny Jackson, "Incentives Needed to Bolster In-building Communications for First Responders", Urgent Communications (October 15, 2013)

FUNDING AND OWNING IN-BUILDING PUBLIC-SAFETY NETWORKS

When the conversation turns to in-building wireless networks, it's virtually impossible to avoid the topic of funding and ownership – whether commercial cellular or public safety.

Multiple business models exist for funding and owning indoor commercial cellular networks, and these models are evolving based on factors such as stakeholder market strategies as well as market conditions and the dynamics of various market segments. Addressing the unfunded mandate for indoor public-safety communications, however, reveals the absence of a business case. Someone will undoubtedly have to fund the effort, and therefore precedents and initiatives must be identified to change the stakeholder outlook paradigm to inspire rather than simply require these investments. The importance of in-building wireless communications for public safety cannot be overstated. An estimated 80 percent of all wireless calls originate or terminate inside buildings. Similarly, a majority of emergency incidents occur indoors. Creating safer in-building environments for occupants and first responders is a clear imperative and it is the mission of the Safer Buildings Coalition, an independent, non-profit organization focused on advancing policies and ideas that lead to more large and medium sized buildings being served with commercial and public-safety wireless coverage.

Put simply, building occupants need in-building cellular coverage not only as a matter of convenience or a business requirement, but also as a vital link for public-safety communications. To wit, when faced with an emergency, building occupants will turn first to their smartphone to call or text

for help. Similarly first responders require in-building coverage for their public-safety two-way radio communications – particularly in the places where emergency personnel typically operate such as stairwells and parking garages.

Getting there requires wireless connectivity for both groups: commercial cellular and public safety. The question and challenge around funding and ownership is whether industry stakeholders can find a model where the two can meet to establish a mutually beneficial business case.

Jonathan Adelstein, President and CEO of PCIA - The Wireless Infrastructure Association, observes that the goals of public safety and commercial wireless need to be met. "What we want to see is a win-win where there is a business case that enables [commercial in-building wireless networks] to be available to public safety but, at the same time, commercial networks do this in a way that is profitable and that ultimately succeeds in the marketplace with liability protection extended to prevent unfair litigation."

FUNDING MODELS FOR COMMERCIAL CELLULAR IN-BUILDING WIRELESS

The in-building wireless industry is predicated upon the business goal of generating revenue and reducing churn for wireless operators by keeping customers connected indoors. The ROI model for deploying in-building solutions has traditionally focused on very large venues having more than 500,000 square feet where many people congregate such as stadiums, airports, subways, shopping malls, casinos, convention centers and larger hospitals and hotels. Typically, these networks have been funded and owned by a wireless operator or third party owner (3PO) as a "neutral host" whose network other operators pay to plug into.

Method:	COMMERCIAL LARGE VENUE	COMMERCIAL MIDDLEPRISE	PUBLIC SAFETY
Carrier	●		
3PO	●	●	
Venue	●	●	●
Shared	●	●	●

Funding sources for Commercial Cellular and Public Safety In-Building Networks.

A perfect storm is brewing, however, influenced by cellular device subscribership that eclipses 90 percent, bring your own device (BYOD) workplace initiatives and saturation of in-building wireless networks within the large venue market segment, which reveals that a new tier of venues is beginning to be targeted. Known as the "Middleprise" and characterized as venues having between venues between 100,000 and 500,000 square feet, this segment – which consists of hotels, hospitals, colleges, retail and multi-level class A office towers – represents a $20B market, of which less than 2% has been tapped. In addition to new technology solution considerations, funding and ownership models within the Middleprise are also changing.

Funding and ownership within the Middleprise is likely going to fall upon the shoulders of the venue owner. That's because wireless operator and 3PO business models, which are often optimized to generate revenue through advertising, won't correlate to drive ROI within the middleprise as successfully as within the large venues space. "It depends on the requirements of a particular area," says Rusty Stone, Telecommunications and Technical Project Manager for the Camden Property Trust, a Houston, Texas-based property management and development firm that operates 168 communities with more than 62,000 apartments across 10 states and the District of Columbia.

Who pays for the DAS? "We do", says Stone. "But we are open to working with someone else who can make that happen. We don't want to own the system. We don't want to touch it. We don't have the staff to design it or maintain it."

FUNDING MODELS FOR PUBLIC-SAFETY IN-BUILDING WIRELESS

Indoor public safety communications is an unfunded mandate whose financial burden is typically absorbed by the venue owner. A review of the stakeholders might suggest this is appropriate. After all, for new construction, the certificate of occupancy (CO) hinges upon compliance with fire and building codes. Besides, the funding of in-building wireless networks may already be understood: consider the aforementioned Middleprise business model for commercial cellular where the venue owner will probably pay for the in-building network. Others, however, believe that the cost of public-safety in-building networks should be shared.

Who's right?

Whether for cellular or public safety, Camden's Stone believes that, at a minimum, the building

owner should provide the building and fire code-compliant rooms for the DAS equipment and pathways for cabling. Stone says that when you design a DAS, you need to understand the public-safety part. "It doesn't cost that much more to install an antenna array to accommodate cellular in future, maybe an additional 15-20 percent on the initial installation." His philosophy is, "Let's pre-wire with coaxial cable, splitters, antennas in the ceiling, and IDF closets so we are ready for plug-and-play. Our challenge as developers is to bring a project from conception to reality in about 24 months. But it's a moving target – macros change, DAS technologies change. The question is, What to do?"

Is it feasible to share the network assets as a means to share the costs by reducing network infrastructure costs as PCIA's Adelstein proposed? For instance, sharing commercial and public-safety network assets within a building whereby the same network used for commercial cellular can enable the public-safety requirement at an approachable nominal incremental cost. Or – thinking outside of the box – a citywide establish in-building public-safety network operator or an entirely new business model where the cost of the system and the operation is 3rd party managed.

Should the financial burden rest, in fact, with the venue owner, it is not without precedent. Chief Alan Perdue a retired Chief of Guilford County Emergency Services in Greensboro, North Carolina and currently the Executive Director of the Safer Building Coalition suggests that in-building networks can become a life safety system like fire sprinkler systems.

Sprinkler systems are commonplace in nearly every jurisdiction in North America. In fact, many even have the requirements for single family residential dwellings. But this was not always the case. As sprinkler systems became an occupancy requirement, building owners, engineers, contactors and tenants recognized the need as well as the benefits. Over time, the code addressing sprinkler systems has been revised and updated, and virtually all new construction and renovations projects within the large venue and Middleprise markets – which are (or will be) affected by indoor public-safety communications mandates – are required to meet the code. The cost of fire sprinklers has long been absorbed by the venue owner. Will the cost for in-building wireless networks supporting public safety in time follow suit?

A case can be made whereby venue owners should benefit for deploying indoor public-safety communication networks through incentives, regardless of whether we consider it a moral obligation or a code requirement for building occupancy. Donny Jackson, editor at Urgent Communications, observed that, "This should not be a simple mandate… rather, any such rules should include incentives to spur existing building owners to take such action, such as tax credits and/or insurance breaks. Frankly, it is surprising that a structure that does not support public-safety communications would pay the same insurance rates as one that does."

Lastly, as PCIA's Adelstein suggests, liability protection should be extended to any venue owner for deploying an indoor network to fulfill the public safety imperative - akin to a "Good Samaritan Law."

"The discussion is not what it cost to install a DAS, but rather what's the cost of not providing an in-building network to support public safety."

Chief Alan Perdue
Executive Director of Safer Buildings Coalition

THE IN-BUILDING WIRELESS IMPERATIVE

Although today we wrestle with challenges that include technology, funding, litigation and network maintenance when it comes to solving for indoor public-safety communications, we believe that ten years from now, we won't be thinking about the cost or even buildings without a public-safety wireless network.

Today's Imperative is clear. Codes must be written to ensure building occupants and first responders can effectively communicate in times of emergency. Technology needs to drive solutions with a lower TCO while improving performance. And the commercial real estate ecosystem must embrace in-building public-safety and commercial in-building networks, and recognize their value and ROI potential.

With FirstNet, we're at a revolutionary point of change. It is vital that indoors does not get left behind.

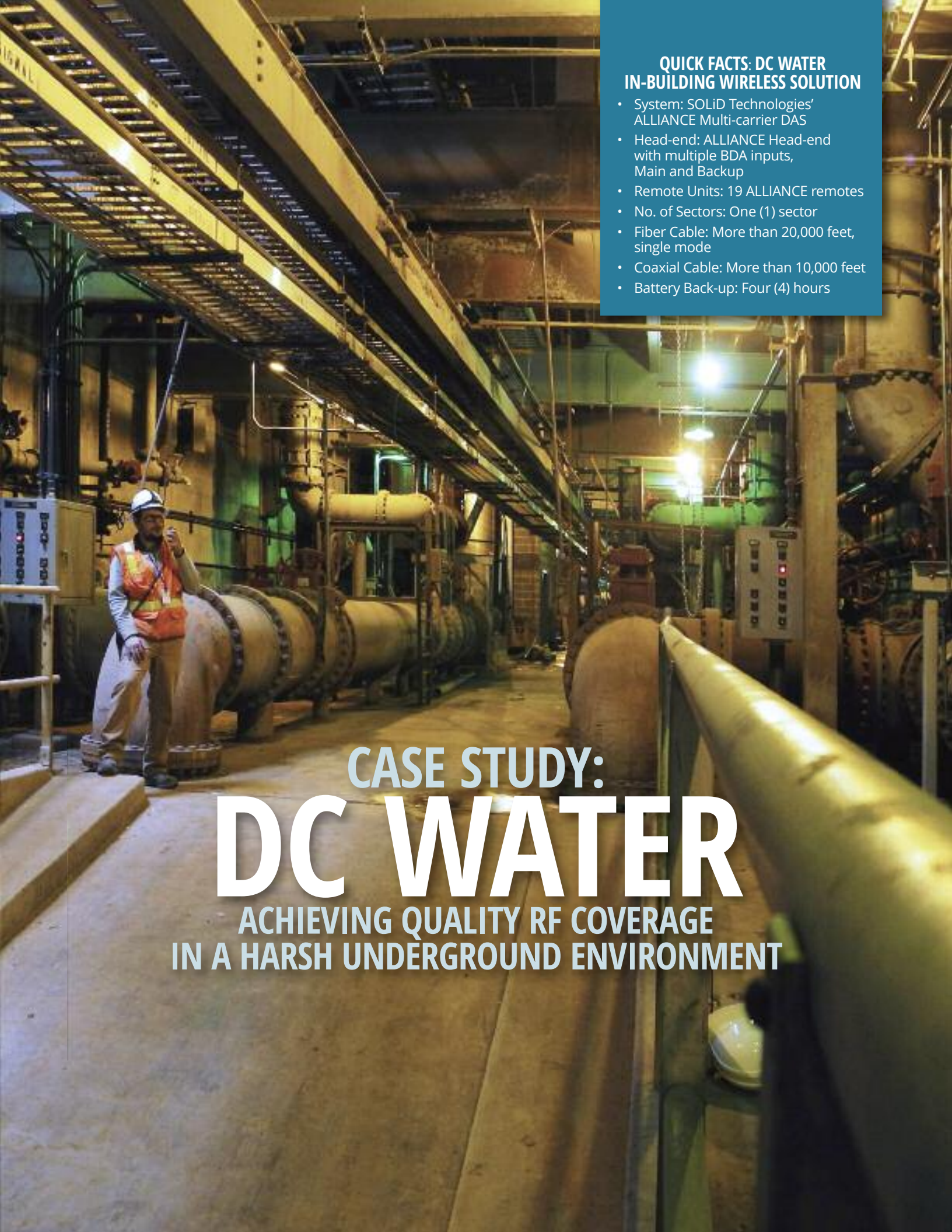

QUICK FACTS: DC WATER IN-BUILDING WIRELESS SOLUTION

- System: SOLiD Technologies' ALLIANCE Multi-carrier DAS
- Head-end: ALLIANCE Head-end with multiple BDA inputs, Main and Backup
- Remote Units: 19 ALLIANCE remotes
- No. of Sectors: One (1) sector
- Fiber Cable: More than 20,000 feet, single mode
- Coaxial Cable: More than 10,000 feet
- Battery Back-up: Four (4) hours

CASE STUDY: DC WATER

ACHIEVING QUALITY RF COVERAGE IN A HARSH UNDERGROUND ENVIRONMENT

The District of Columbia (DC)'s Water and Sewer Authority, called DC Water, operates one of the most advanced wastewater treatment plants in the world. It is also a highly visible target according to reports citing anti-terrorist experts.

Known as Blue Plains Advanced Wastewater Treatment Plant, the system serves more than two million Washington metro area residents in the District of Columbia along with suburbs in adjoining Northern Virginia and Maryland.

Blue Plains has a capacity to treat 370 million gallons of sewage a day through a series of large treatment pools in several buildings spread over an expansive site and connected by over three miles of tunnels and underground facilities.

Power backup unit with SOLiD ALLIANCE remote.

DC WATER WORKERS NOW USE THE SAME P25 HANDSETS AS THEIR D.C. POLICE AND FIRE COUNTERPARTS.

THE PROBLEM:

The tunnels house all of the underground facilities for the Treatment Plant – pipes for moving sewage and water, and transportation for workers between the various facilities. While in the tunnels, workers must be able to communicate with supervisors and with colleagues who are both in the tunnels and above ground.

The workers use handheld radios that operate on 700-800 MHz frequencies licensed by the DC Office of Unified Communications (OUC). Workers who were above ground could not communicate with their co-workers in the tunnels.

More important, by code, DC Water must provide communications for public-safety purposes. Radios must work to allow access to supervisors and dispatch. Fire and police need coverage whenever and wherever they were on site.

THE SOLUTION:

Morcom International, a wireless system integrator, proposed the wireless solution that ultimately was selected by DC Water. Morcom designed and installed the ALLIANCE™ multi-carrier distributed antenna system (DAS) manufactured by SOLiD. Donor antennas were installed above ground to pick up OUC frequencies from several sites in the city on a line-of-sight (LOS) basis. These radio frequency (RF) signals were fed into bi-directional amplifiers (BDAs) installed at the DAS head-end. The head-end equipment converts the RF to optical signals that are transmitted over fiber optic cables to the DAS remote units. The DAS remote units then convert the optical signals back to RF which is fed to indoor antennas that are strategically located through the tunnels.

"The biggest challenge in locating the antennas is that the tunnels are not level", said Manuel Ojeda, Morcom's President. "Tunnels are at different elevations with a lot of ups and downs between them, and sharp curves in the tunnels so you do not have very good line-of-sight transmission between the workers' radios and nearby indoor antennas. We ended putting a lot of antennas throughout the tunnels to achieve quality RF coverage."

RF coverage in the tunnels could have been achieved using radiating coaxial cable but there was concern that these cables would corrode over time in such a harsh underground environment. As well, there was a chance that underground RF signals could radiate above ground and cause interference. Designing a DAS allowed Morcom more control over antenna placements, and isolation between frequencies in the tunnel system and outside frequencies.

A single SOLiD system proved to be a viable way of accommodating different frequency bands, both the OUC 760-860 MHz and public safety 800 MHz. DC Water workers now use the same P25 handsets (Motorola Solutions' APX-4000 and APX-6000) as their D.C. police and fire counterparts. More important, the SOLiD ALLIANCE system has the capability to add commercial cellular frequencies in future.

Ojeda pointed out that DC Water may want to add Wi-Fi to the tunnels at some point. "That would be a separate system from the SOLiD equipment but the Wi-Fi system could use extra fiber strands in the fiber optic cable that was installed for the DAS".

For more information, read the detailed case study at:
http://www.solid.com/resources/case-studies.html

Glossary of Terms: In-Building Wireless for Public Safety

1221 Committee - A National Fire Protection Association (NFPA) committee focused on creating a standard for the installation, maintenance, and use of emergency services communications systems.
1802 Committee – A National Fire Protection Association (NFPA) committee focused on creating a standard for personal portable (hand-held) two-way radio communications devices used by emergency services personnel in the hazard zone.
4G LTE - A term used to describe the 4th generation of cellular network technology, considered the Long Term Evolution strategy of mobile high-speed data networked for mobile communications.
700 MHz D Block Band 14 - A 10MHz portion allocated in the upper 700MHz spectrum adjacent to the current licensed public safety band that is not yet in service. Public safety could use the added spectrum to support a nationwide broadband network and expand the current public safety spectrum.
800 MHz Trunked Radio – A unique radio repeater system that allows semi private communications between more groups of users than there are allocated frequencies. This enables many users to communicate over fewer frequencies by sharing the bandwidth of the trunked system.
BBU - Base Band Unit: Acts like a "digital" BTS and functions like a switch or a router at the DAS connection to the network.
BBU Hotel – A network topology concept that centralizes multiple BBUs to provide access to multiple DAS and small cell locations networked with a fiber backhaul.
BDA - Bi-directional Amplifier: Also known as a cell phone signal booster or amplifier in the cell phone industry, it is a device used for boosting the cell phone reception to the local area by using a reception antenna, a signal amplifier, and an internal rebroadcast antenna.
BICSI - Building Industry Consulting Services International: An organization that established best practices and standards for in-building structured cabling systems.
C-RAN - Centralized Radio Access Network: A centralized, cloud computing based new radio access network (commonly known as cellular network) architecture that can support 2G, 3G, 4G system and future wireless communication standards. It provides access to multiple wireless technologies to increase capacity issues of traditional macro cell networks.
CPRI - Common Public Radio Interference: A standard that defines the interface of base stations between the Radio Equipment Controllers (REC) in the standard, to local or remote radio units, known as Radio Equipment (RE). It is a proprietary protocol that each manufacturer uses to enable communications between BBU's and RRU.
DAS - Distributed Antenna System: A network of spatially separated antenna nodes connected to a common source via a transport medium that provides wireless service within a geographic area or structure with improved reliability. A distributed antenna system may be deployed indoors (an iDAS) or outdoors (an oDAS).
Donor Antenna - An antenna located on the exterior of a structure that is used to relay the in-building networks traffic to a known public safety base station or repeater tower or cellular tower.
E-911 - Enhanced 911: A system used in North America that links emergency callers with the appropriate public resources. Mandated by the FCC, it requires that mobile caller be identifiable by the dialing number and their location.
FirstNet - First Responder Network Authority: Created as an independent authority within the National Telecommunications and Information Administration (NTIA) to establish, operate, and maintain a high-speed, nationwide interoperable public safety broadband network for emergency and daily public safety communications.
Head-end - Generic term for the demarcation point of a DAS network where much of the equipment resides that receives communications signals for distribution to a local region.
IBC - International Building Code: A model building code developed by the International Code Council (ICC) that establishes minimal regulations for building systems. A large portion of the IBC deals with fire prevention.
iDAS – A distributed antenna system (DAS) that is deployed indoors.
IFC - International Fire Code: A comprehensive fire code that establishes minimum regulations for fire prevention and fire protection systems using prescriptive and performance-related provisions. It addresses conditions hazardous to life and property from fire, explosion, handling or use of hazardous materials and the use and occupancy of buildings and premises.
In-Building Wireless - A generic phrase to cover multiple RF networks that provide coverage within a structure or building.
Indoor Antenna - An antenna that is mounted on the wall or ceiling and can be omni-directional.
Middleprise - The new industry term for the enterprise market defined as venues having 100k to 500k square feet, where neither conventional DAS nor Small Cells offer optimal solutions.
MIMO - Multiple Input-Multiple Output: A method for multiplying a radio's capacity using multiple transmit and receive antennas.
NEC - National Electric Code: A regionally adoptable standard used as the benchmark for safe electrical design, installation, and inspection. It was published by the National Fire Protection Association for the safe installation of electrical wiring and equipment in the United States.
NEMA 4 - A standard for equipment housings and enclosures that stipulates watertight construction capable of withstanding 65GPM of water from a 1" nozzle from a distance of no less than 10 feet for 5 minutes.
NFPA 1 - The National Fire Protection Association code that covers a complete range of life safety criteria for fire protection systems equipment and occupant safety in new and existing buildings.
NFPA 72 - The National Fire Protection Associations code that covers emergency communication systems and signaling. It specifies the application, installation, location, performance, inspection, testing, and maintenance of fire alarm systems, fire warning equipment, emergency warning equipment, and their components.
oDAS - A distributed antenna system (DAS) that is deployed outdoors.
P25 - (also known as APCO-25 or Project 25) A long standing partnership between the public safety communications community and industry manufacturers established with a common goal of meeting the requirements of mission critical interoperable LMR systems to allow for communication between agencies and mutual aid response teams in emergencies.
PIM - Passive Intermodulation: A form of signal distortion or interference that occurs in passive components that degrade the quality of the signal, typically caused by poor manufacturing quality of materials or environmental corrosion of connectors and cabling.
RRU - Remote Radio Unit: A radio node on a DAS network providing RF power and connectivity to the distributed antennas.
RSSI/RCPI - Receive Signal Strength Indicator /Received Channel Power Indicator: RSSI is the arbitrary measurement of the received signal power in a wireless network (think "bars", but the bars are not exact values and vary between devices and network). RCPI is a more exact measure and is exclusively associated with IEEE's 802.11 WiFi protocol.
Safer Buildings Coalition - An independent, non-profit organization focused on advancing policies and ideas that lead to more large buildings being served with commercial and public safety wireless coverage.
Signal Booster - A device used for boosting the cell phone reception to the local area by the usage of a reception antenna, a signal amplifier, and an internal rebroadcast antenna. These are similar to the cellular broadcast towers used for broadcasting by the network providers, but are much smaller, usually intended for use in one building.
Small Cell - Low-powered radio access nodes that operate in licensed and unlicensed spectrum that have a range of 10 meters to 1 or 2 kilometers. They are "small" compared to a mobile macrocell, which may have a range of tens of kilometers. They transmit and receive cellular frequencies and require a backhaul communication link to the network. Small cells are a vital element to 3G data offloading, and many mobile network operators see small cells as vital to managing LTE Advanced spectrum more efficiently than using just macrocells.
SNR – Signal-to-noise ratio: A measure used to compare the level of a desired signal to the level of background noise. It is defined as the ratio of signal power to the noise power, often expressed in decibels. A ratio higher than 1:1 (greater than 0 dB) indicates more signal than noise.
Splitters/Combiners - Components of the physical coaxial infrastructure used to distribute RF signals to the antennas while balancing and maintaining the required signal power.
UHF - Ultra high frequency: The designation for radio frequencies in the range between 300 MHz and 3 GHz, commonly used for television broadcasting, cell phones, satellite communication including GPS, personal radio services including Wi-Fi and Bluetooth, walkie-talkies, cordless phones, and numerous other applications. UHF radio waves propagate mainly by line of sight; they are blocked by hills and large buildings although the transmission through building walls is high enough for indoor reception.
VHF - Very high frequency: The range of the radio spectrum is the band extending from 30 MHz to 300 MHz. Common uses are FM radio broadcasting, television broadcasting, and two-way LMR radios for public safety and commercial business use.
Wi-Fi - Wireless Fidelity: A term used to describe any type of 802.11 standard wireless network. Products tested and approved as "Wi-Fi Certified" (a registered trademark) are certified as interoperable with each other even if they are from different manufacturers.

SOLiD
800 Klein Road, Suite 200
Plano, TX 75074
888.409.9997

Connect with SOLiD

SOLiD helps keep people stay connected and safe in a rapidly-changing world through a portfolio of RF Amplifier, RF Radio and Optical Transport solutions. SOLiD enables indoor and outdoor cellular and public-safety communications at some of the world's best-known and most challenging venues including leading hospitals; professional, and college sports venues; government, university and Fortune 500 corporate buildings and campuses; international airports and metropolitan subways; and other high-profile sites.

For further information on SOLiD DAS, Backhaul and Fronthaul solutions,
go to www.solid.com or call 888.409.9997.

solid.com